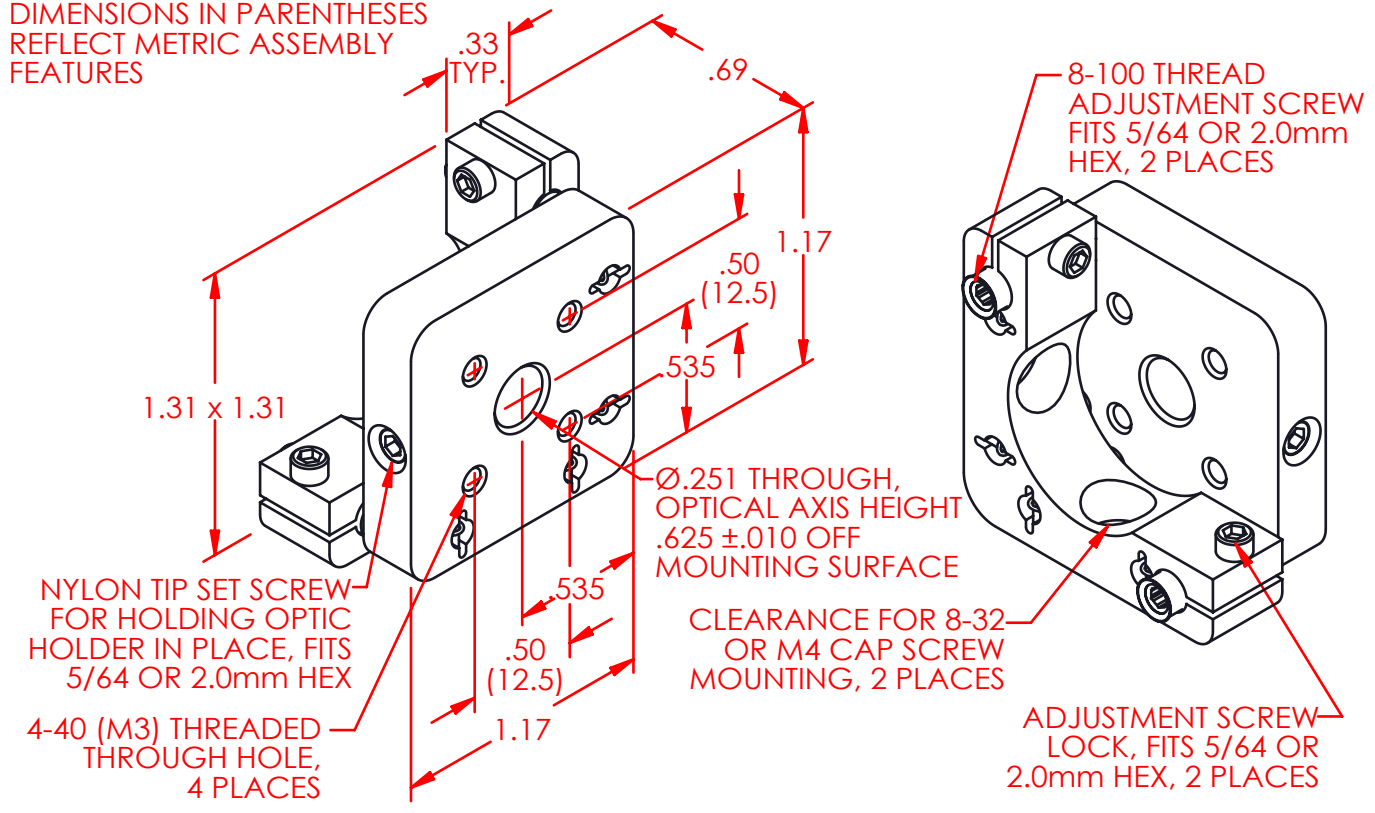
DIMENSIONS IN PARENTHESES REFLECT METRIC ASSEMBLY FEATURES
.33 TYP.
.69
1.17
.50 (12.5)
.535
1.31 x 1.31
Ø.251 THROUGH, OPTICAL AXIS HEIGHT .625 ±.010 OFF MOUNTING SURFACE
NYLON TIP SET SCREW FOR HOLDING OPTIC HOLDER IN PLACE, FITS 5/64 OR 2.0mm HEX
.535
.50 (12.5)
1.17
4-40 (M3) THREADED THROUGH HOLE, 4 PLACES
8-100 THREAD ADJUSTMENT SCREW FITS 5/64 OR 2.0mm HEX, 2 PLACES
CLEARANCE FOR 8-32 OR M4 CAP SCREW MOUNTING, 2 PLACES
ADJUSTMENT SCREW LOCK, FITS 5/64 OR 2.0mm HEX, 2 PLACES